RevNo	Revision note	Date	Signature	Checked

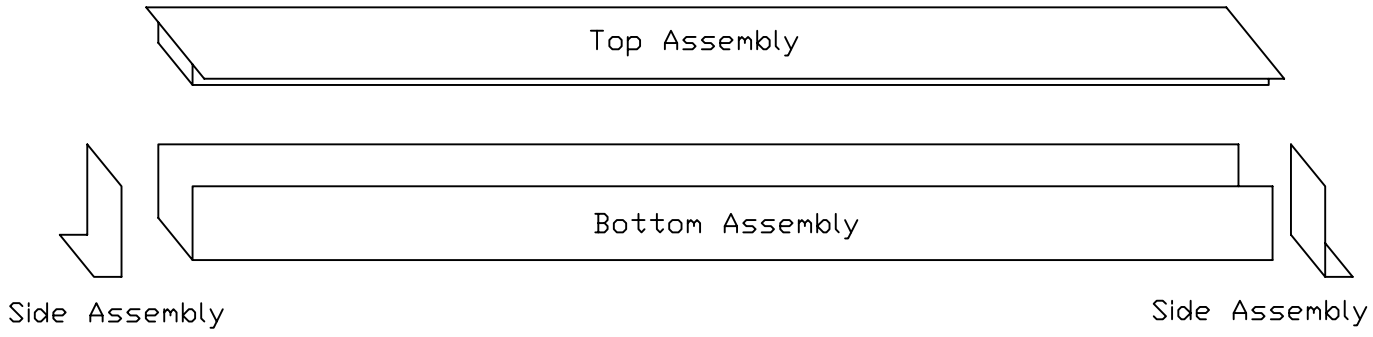

Assembly Parts

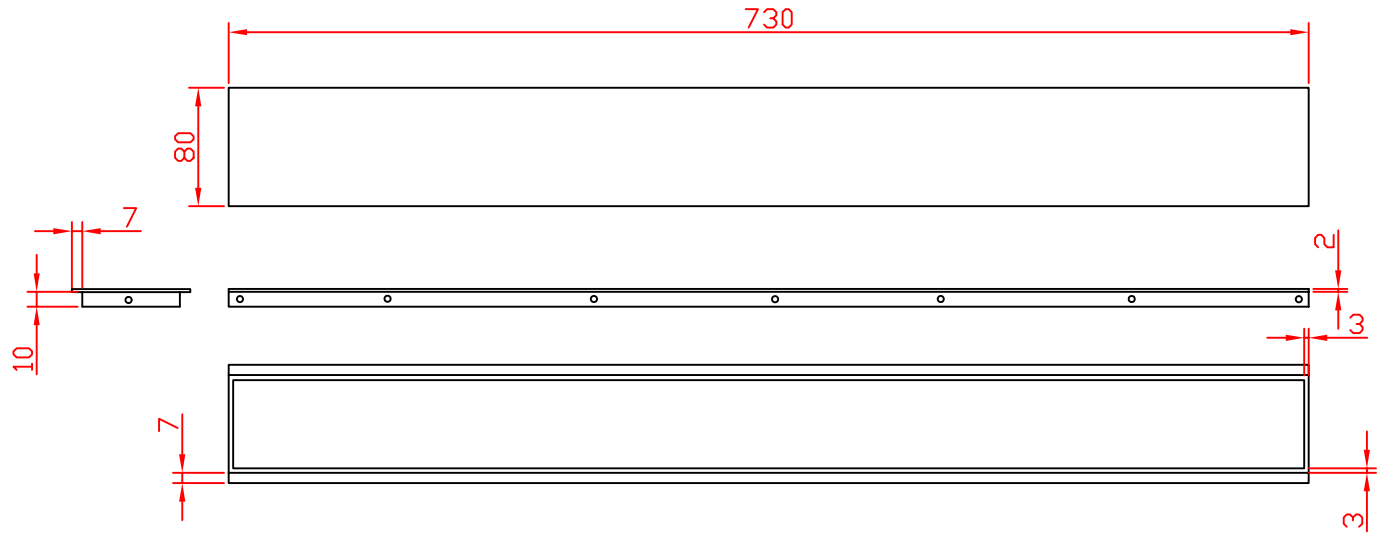

Top Assembly

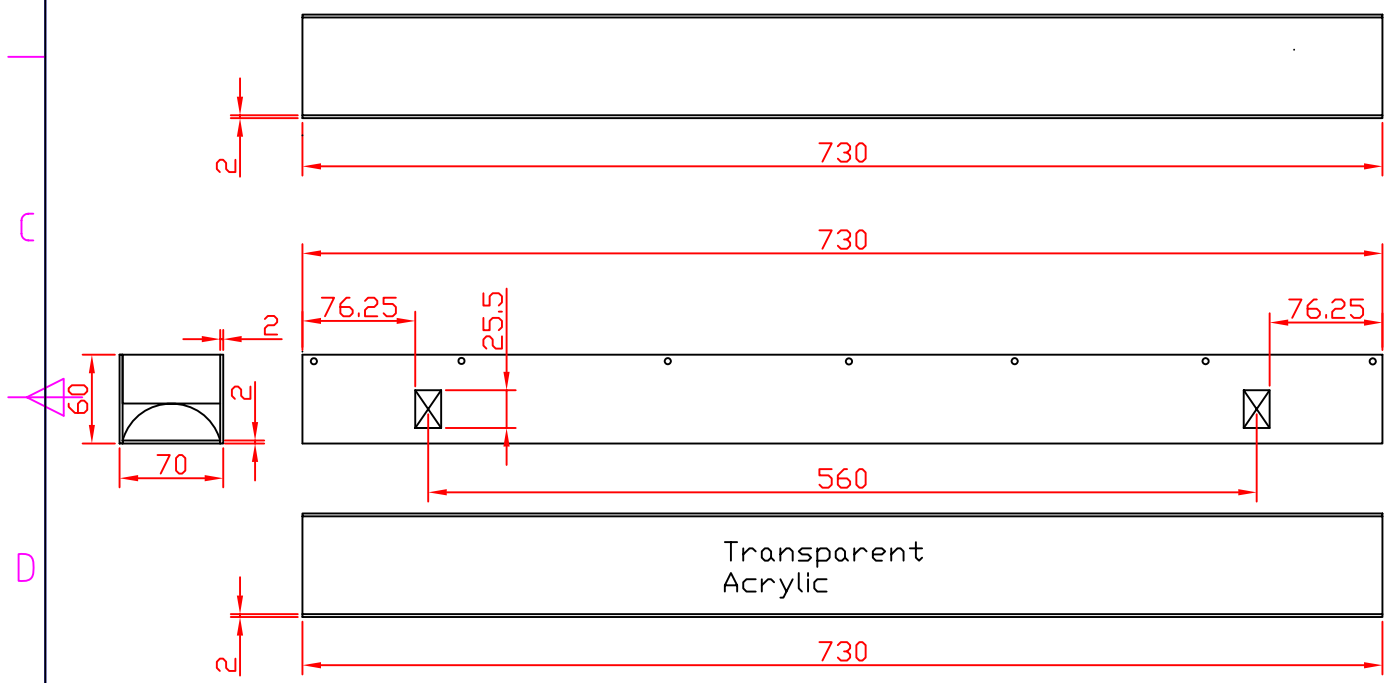

Bottom Assembly

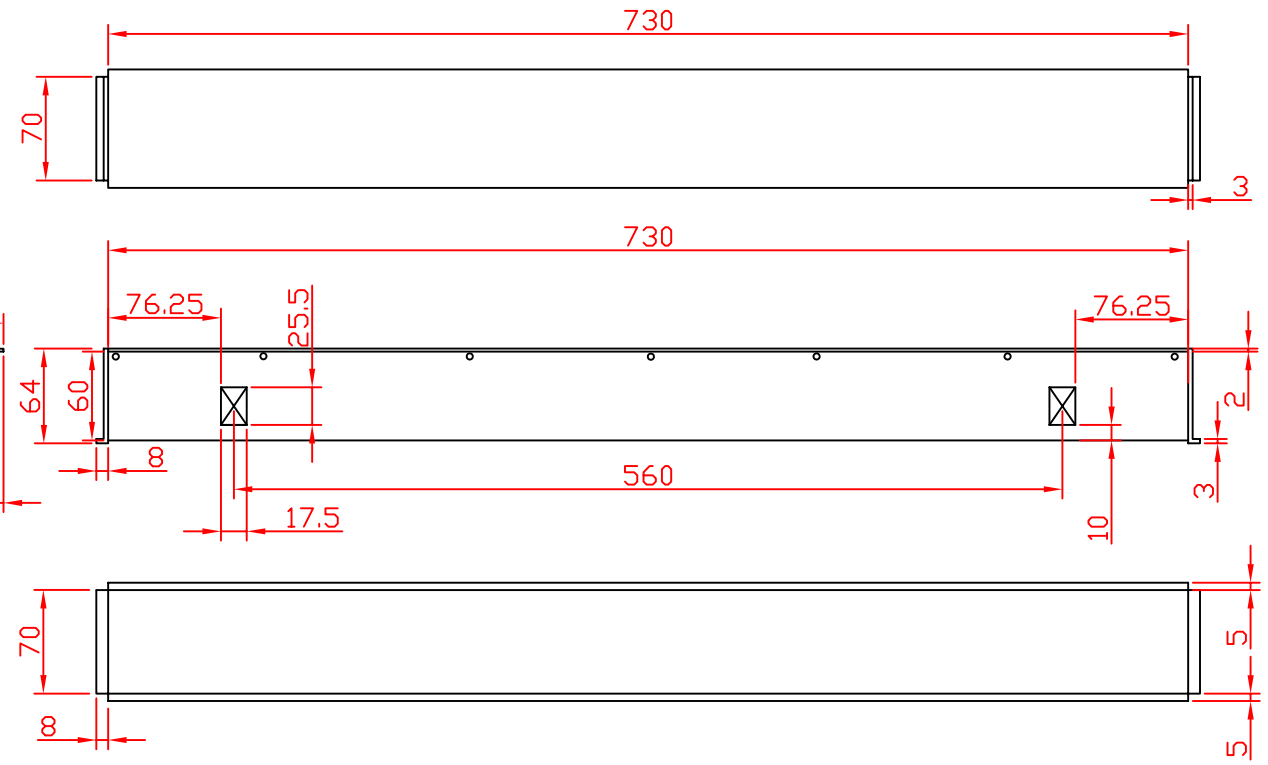

Assembled View

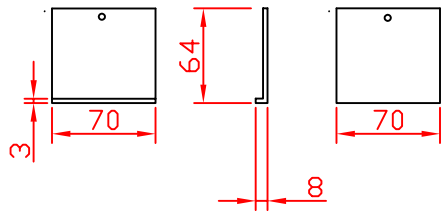

Side Assembly x 2

Itemref	Quantity	Title/Name, designation, material, dimension etc		Article No./Reference	
Designed by CSL	Checked by CSL	Approved by - date CSL - 26/09/05	File name Light Box	Date 26/09/05	Scale 1:1
CSL		2ft 4 TubeT5 Light Box			
		1		Edition 0	Sheet 1/1