Aux Power Adapter

- Specifications:
  - 12VDC output @ 500milliamps (or more)
  - 2.1mm tip
  - Center positive
- Purchase from Neptune store
- Use any adapter which fits and meets the specs.

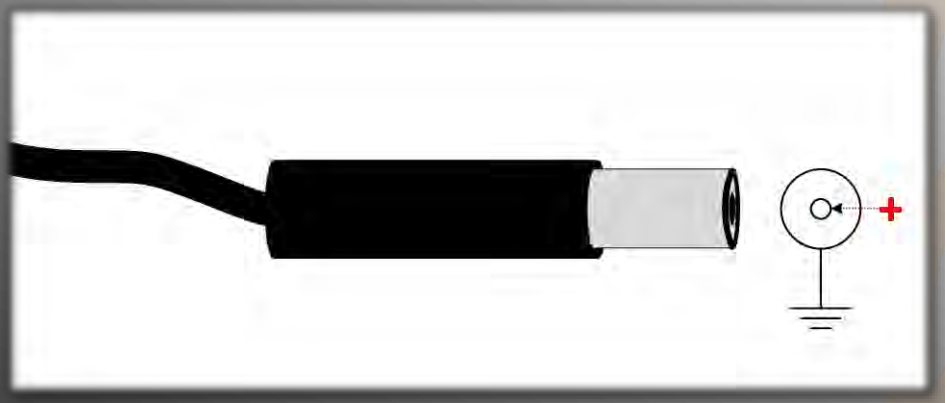

Power Monitor Feature

- Enabling Power Monitor turns the aux power input from a simple power input into a power ***sensor***.

Power?
No Power?

Power Monitor Feature

Power Monitor Feature

- Power Monitor should only be enabled if 12v aux power is connected AND one or more EBs are provided AC power through a UPS unit.

Enabling Power Monitor without having a battery-backed EnergyBar is a common configuration error

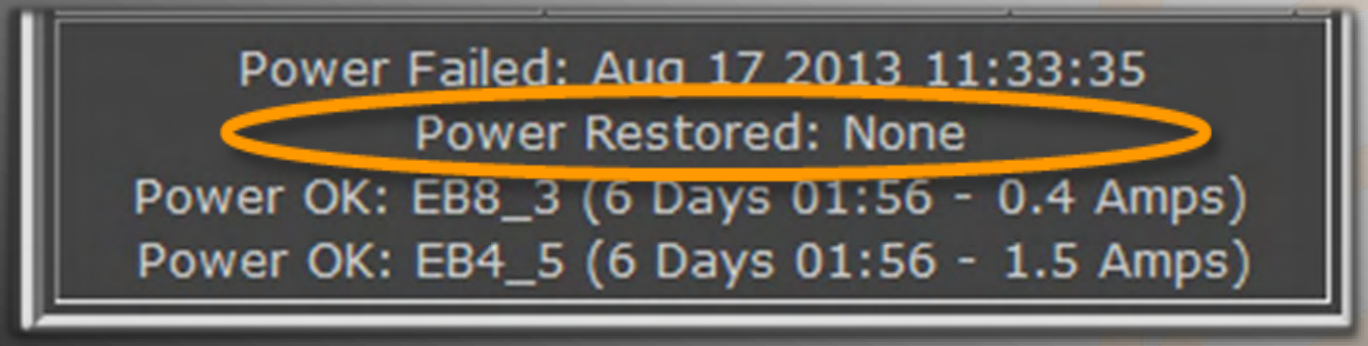

UPS ???

- THIS kind of UPS…

  An interruptible power supply, aka battery backup unit

Usage Scenarios

Scenario Scenario – Starter System

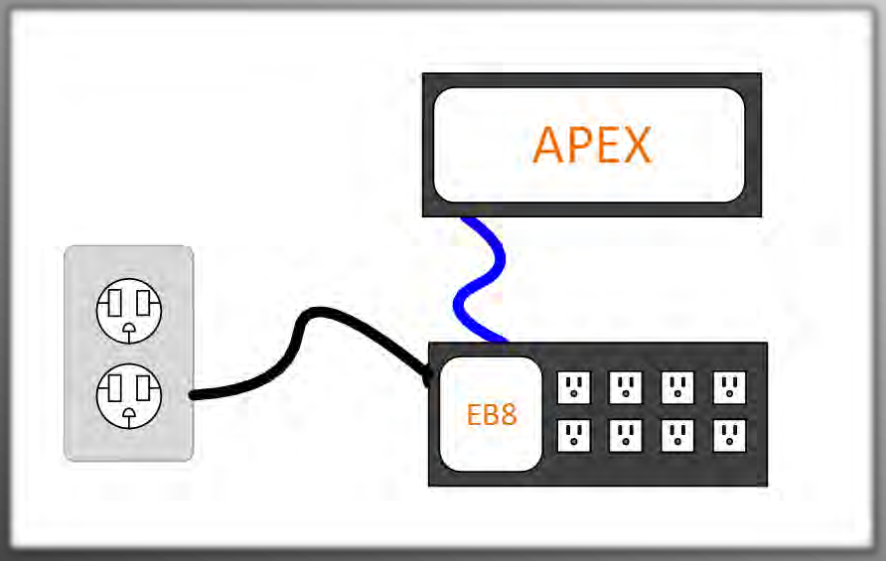

You can:

- Be notified via email of power *return*
- Be notified that the Apex has been rebooted

You cannot:

- Be notified of power *loss*
- Keep any tank equipment running

Scenario - Intermediate

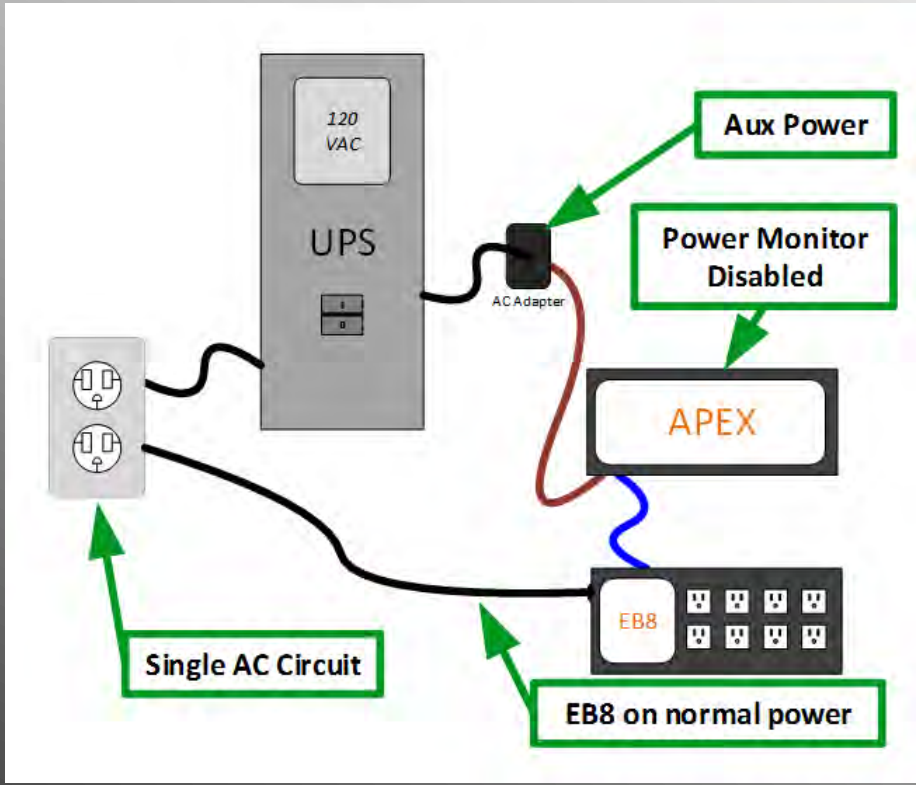

You can:

- Send EB power loss alert email
- Sound EB power loss audible alerts

You cannot:

- Keep any tank equipment running upon power loss

In this scenario, the UPS merely provides power to the Apex itself so audible alarms can be triggered and email notification can be sent.

- Even a small UPS will keep Apex running for many hours

Advanced Scenario – done WRONG

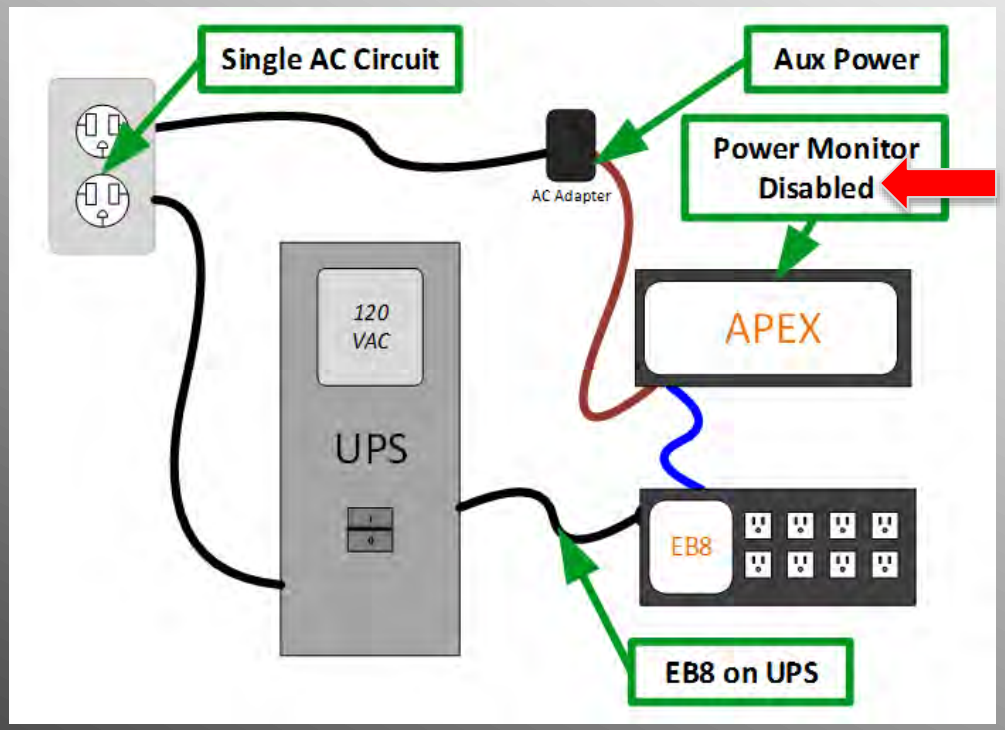

You can:

- Keep everything running (until the UPS runs "dry"

You cannot:

- Send power loss alert email
- Sound power loss audible alert
- Selectively shut off non-critical outlets to preserve UPS runtime

- *This scenario is impractical*

Advanced Scenario – Done RIGHT

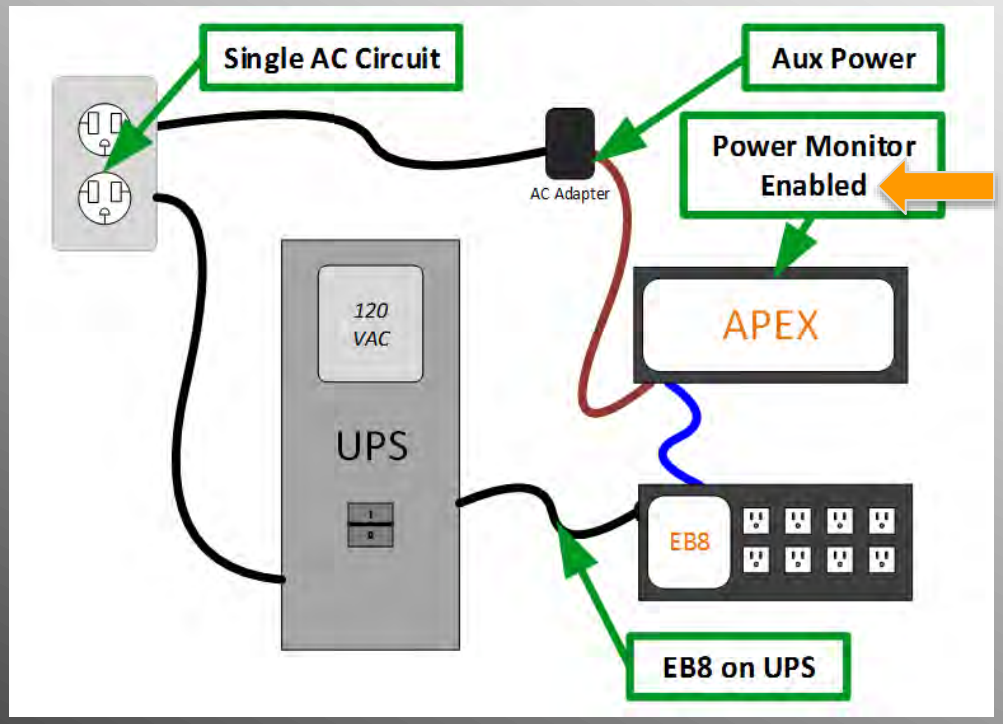

You can:

- Get Apex power loss alert email
- Sound Apex power loss audible alert
- Selectively shut off non-critical outlets to preserve UPS runtime

You cannot:

- Get EB power alert email & tones

- Limited by UPS runtime

Scenario - Ultimate

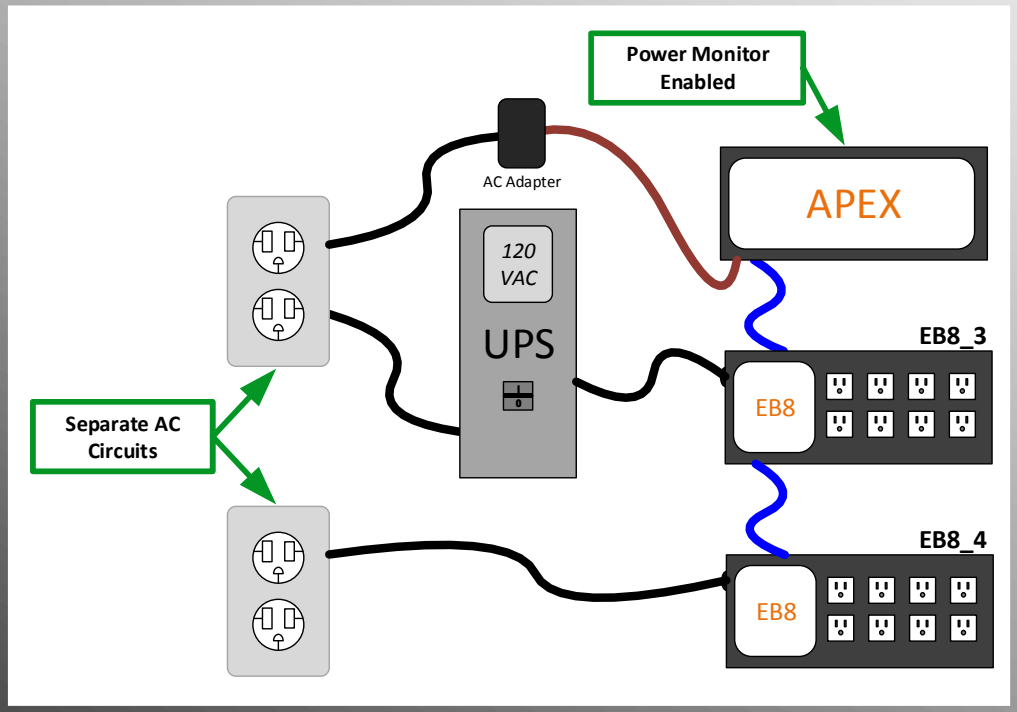

You can:

- Send Apex power loss alert email
- Sound Apex power loss audible alert
- Send EB8_4 power alert email
- Split identical loads between EBs (such as powerheads or heaters)
- Put critical equipment on EB8_3
- Put other non-critical equipment on EB8_4
- Shut off non-critical equipment on EB8_3 to prolong UP runtime
- Shut off non-critical equipment on EB8_3 if EB8_4 has no power

- Provides protection of critical gear from total power loss
- Allows you to tell what lost power
  - One circuit or whole house

Prolonging UPS Runtime

- Operate only the most critical equipment during a power loss
  - Circulation pumps
  - Skimmer (for aeration & gas exchange)
- Program outlets to shut off non-critical equipment
- Program outlets to shut off power-hungry equipment
- Program controllable circulation pumps (Vortechs and Tunze) to use an energy-saving profile
- Use OSC (oscillate) to switch circulation pumps ON & OFF
- Have an emergency-only powerhead in sump come ON upon power loss so return pump can be shutdown.