Aerofoamer Instructions

Read before Installation

Read Completely Before Installation!!!

- **Congratulations on your purchase of the Reef Concepts Aerofoamer !**
- **Refer to the chart below for recommended pumps. The pumps gph rating determines the efficiency of the skimmer, therefore the higher the pumps rating the more efficiently the skimmer will be.**
- **Other pumps may be substituted. However, the pump must be rated for pressure! The Sen and the Mag Drive are "not" rated for pressure, but will work as listed below.**
- **The chart ratings below are for tanks under a normal bio-load.**
- **At a minimum the systems water volume should be turned over at least once every hour!**
- **Prior to installation completely wash the Aerofoamer to remove all debris that may have accumulated during the manufacturing process.**
- **Engraved in the sump of your skimmer is the serial number to your Aerofoamer.**

Model	Dimensions	Aquarium Size	Minimum Flow Rate	Suggested Pump
600 Series – 6" Reaction Chamber				
624	8" x 8" 24" High	50 to 250 Gallons	900 gph	Sen 900 - Mag18
630	8" x 8" 30" High	100 to 500 Gallons	1000 gph	Mag18 - Mag 24
648	8" x 8" 48" High	150 to 1000 Gallons	1100 gph	Mag - 24 55RLT
800 Series – 8.5" Reaction Chamber				
820	10"x 10" 20" High	50 to 275 Gallons	1000 gph	Mag - 24 - 55RLT
824	10"x 10" 24" High	100 to 350 Gallons	1000 gph	Mag - 24 - 55RLT
830	10"x 10" 30" High	100 to 1000 Gallons	1100 gph	Mag - 24 - 55RLT - 70 RLT
848	10"x 10" 48" High	200 to 2000 Gallons	1500 gph	70RLT-100RLT - 5.5MDQ-SC

Note: The 800 series holds approximately two times the volume as the 600 series!

Development:

Every effort was made during the development of the Aerofoamer to ensure the skimmer is the easiest to clean and the most efficient on the market. The Aerofoamer like all protein skimmers requires periodic maintenance and careful placement. Choosing a suitable location either in or out of the sump that provides for easy access to the collection cup, gate valve and the air injection valve are highly recommended. Correct placement will ensure the Aerofoamer's continued ease of use.

If your application places the Aerofoamer outside the sump, and the return line goes through the sump wall, we recommend the use of a union between the Aerofoamer's sump and the gate valve. The Aerofoamer can then be removed if needed and the gate valve will retain the water in the main sump. The gate valve can be removed from the Aerofoamer and installed inside the main sump to save room if required.

The Aerofoamer requires some assembly. Detailed drawings are attached to the bottom of this document to assist you in the correct installation and configuration of the Aerofoamer. Please take a few minutes and look over the drawings to familiarize yourself with the various components before continuing with the installation instructions.

Assembly Instruction:

Note: The 648 and 848 have an extra 18" reaction chamber and drop tube that are installed between the collection cup and the base of the Aerofoamer.

- Decide whether you want to install your skimmer inside or outside your main sump.

  - ✓ If installed inside the sump make sure the water level in the sump does not rise more than half the way up the skimmers reaction chamber. If the water is allowed to rise above the half- way point it will create unnecessary "**backpressure"** on the skimmer and raise the water level in the skimmer thereby overriding the gate valve.

- Whether the skimmer is placed inside or outside the main sump, it is recommended that an elbow be installed on the outlet side of the gate valve. This elbow is to be located inside the main sump, for the following reasons:

  1. As the water in the sump rises and falls from either evaporation or normal fluctuation, changes in the backpressure will be created. If the elbow is not installed, the water level of the skimmer may constantly change making adjustments difficult.
  2. If the skimmer releases any bubbles from the skimmer's sump, the bubbles will be forced to the top of the water in the main sump and will be released into the atmosphere without finding their way to the main tank.
  3. The Aerofoamer creates a tremendous amount of bubbles. The Aerofoamer's sump is relatively small, which allows the reaction chamber to be as long as possible, this design was incorporated to create the most contact time possible for a skimmer of a certain height. Not all Aerofoamers expel bubbles out of its sump. Final adjustments to the nozzles should correct this.

- Piping Installation:

- There are a number of options that are available for the piping, flex tubing, ridged PVC or Flex PVC. However, flex PVC is suggested since it does not have sharp bends, which can cause increased resistance thereby increasing head pressure. Depending on your particular setup this may not be possible due to space constraints.

- Gate Valve Installation:

- The gate valve can be installed either to the bulkhead of the skimmers or inside the main sump with the skimmer outside.

  1. Install the 1" PVC drop tube to the union on the sump of the Aerofoamer by aligning the bracket of the flange to the skimmers reaction chamber with the (2) short screws.
  2. Install the injector, rotating it to the desired location and then tighten the union of the drop tube to the sump.
  3. Adjust the final PVC nozzle horizontally in the sump of the Aerofoamer. The nozzle is made up of (3) PVC elbows.

- After startup, adjust the nozzle so that bubbles are not introduced into the main sump of the system. The Aerofoamer's design makes use of all available space but may on occasion allow some bubbles access to the main sump.

- If bubbles are being introduced into the sump, here are a few tips that should help solve the problem.

  1. Rotate the final nozzle (elbows) upward. If this does not eliminate the bubbles, rotate the first elbow upward so the final elbow can be rotated in a more vertical position. The final elbow should be rotated so the incoming water deflects off the wall of the skimmer's reaction chamber. This will make the water ***SWIRL*** increasing the dwell or contact time.
  2. Install an elbow on the output side of the skimmer in the main sump. This will direct the water to the surface of the sump where the bubbles can dissipate, and not get into the main tank.
  3. Assuming your setup is like drawing #2 or #4 you can install a larger diameter tube under the outlet tube. This larger tube will be at the same height as the water level in the sump. The water will exit the outlet tube, enter the larger tube and the bubbles will be forced to the water surface in the sump where the bubbles can dissipate, and not get into the main tank.

- When installing all of the above make sure that you have installed the appropriate O-rings. With one hand squeeze the flanges together and then with the other hand tighten the thumbscrew. With the newer softer O-rings provided, no tools are required!

- Once the return water line with gate valve is installed.

  1. Run a flex line from the pump to the hose barb on the injector. Be sure all hoses are secured with the proper clamps. If Flex PVC is used ensure the appropriate cement is used!
  2. Install the barb fitting to the bottom of the collection cup. Hand tightening only! Install the proper O-ring and place the collection cup in the position that is best for your setup.
  3. Install a line from the collection cup barb to the waste cup, (supplied by user) or the (optional) AUTO-Waste Collector.
  4. Next open the gate valve all the way (Counter Clockwise), and close the air injection valve (Blue-handled ball valve to the horizontal position).

Adjusting The Aerofoamer:

- Turn on the pump and secure any loose fittings, as necessary.

  1. Slowly close the gate valve (Clockwise) until the water rises and fills about 60% of the skimmers reaction chamber. Do not include the skimmer collection cup for this starting point.
     - ✓ Notice the injector housing will accumulate some water in it. This is normal. The reason is because the Beckett injector is a type of venturi and does not suction water until the water has passed the injector. The Beckett injector is not glued so some water may drip out the sides of the injector. This is also normal! The excess water that may accumulate in the housing will eventually be suctioned into the Beckett.
  2. Slowly open the air injection valve to adjust airflow. The injection valve adjusts the amount of airflow and the size of the bubbles. A starting point to adjust the air valve is to open it until the loudest suction noise is heard. This adjustment can be changed later.

3. The skimmer should now begin to foam. Readjust the gate valve until the foam runs a few inches below the collection cup. The height of the water in the skimmer will have to be determined on site. There is ***"no"*** way to tell you where to run the water line as it is determined by your pump, organics in your system and your preference of how "wet" or "dry" you want your foam to be.

- As the skimmer "breaks in" you will begin to develop thick, dark foam, or wet if you have adjusted it to do so. Allow ample time for this break in period to occur. Once you become familiar with the skimmer you will be able to better determine the settings that are best suited for your particular application. Once again check for leaks.
  - ✓ When the skimmer is operating within the breaking in period it may ***"not"*** produce small bubbles! Most do, but some may take up to 24 hours to accomplish this, just let it run and give it a chance!
- ***Ozone***: If ozone is used here are two options :

1. Install a tee on the intake side of the air injection valve. Install a pump to push the ozone from your ozone generator to this tee. The Aerofoamer will suction in the amount of ozone that your ozone generator is supplying. This requires an additional air pump, but we feel this is the best way to administer ozone. In this manner, the exact amount of ozone produced is introduced to the Aerofoamer.

2. Locate and remove the cap on the top of the injector housing and run a line from your ozone generator to this barb.

Maintenance Instruction:

- The keyhole slots make servicing the Aerofoamer skimmer simple and easier. Loosen the thumbscrews and rotate the collection cup to remove. **Do not** super clean the collection cup. Super cleaning the collection cup will require you to repeat the break-in period.
- The Aerofoamer injector, like anything, does require maintenance from time to time. The Beckett injector, which is the black plastic devise inside the injector housing needs to be cleaned to remove airborne partials, limpets, and other shellfish that make their way inside and can clog the injector.
  - ✓ Both the injector housing and the Beckett injector come completely apart for cleaning. To gain access to the Beckett injector, loosen the thumbscrews and twist the cover to remove it. Twist and pull the injector at the same time to remove it from its housing.
  - ✓ Once the injector is removed from the housing, remove the PVC fitting from the bottom and the top of the injector. Next remove the 3/4" PVC pipe. If it will not remove easily, heat the PVC pipe with a heat gun or a hair dryer. On occasion this connection can become rather stubborn. If this happens you may heat it as stated above and hold it with a rubber jar opener and give it a twist. The jar opener is to keep the "warmer" plastic from burning your hands.
  - ✓ After cleaning, reinstall the Beckett in the same manner. Remember the short part or the "bulb" of the injector goes to the bottom! When installing the Beckett injector in the PVC fittings, it may be wrapped with Teflon tape. Do this by holding the Beckett injector with the internal part already installed (it will only go in one way) and wrap several times with Teflon tape around the injector, as you wrap remember to hold the Beckett tight. The tape is needed as some of the Beckett injectors and PVC fittings don't always fit the injector snugly!

- ✓ The Teflon tape is to be placed on the ends of the injector where the PVC will cover it, only! The injector may "drip' some water inside the housing. This is because the injector is not glued so removal and cleaning are possible. The Beckett may also let some water drip from its seam. There is very little water lost here and is not a problem. It will be suctioned back into the skimmer if it gets too high in the injector housing.
- ✓ If you prefer to eliminate the drip, glue the Beckett with PVC cement. Once this is glued, it can never be opened again. If glued, the injector now must be placed in a mild acid (25% Muriatic Acid) to clean any stubborn debris that may have accumulated inside. Once the injector is soaked in the Muriatic Acid, it must be rinsed under water to neutralize the acid! It can be "tapped" to dislodge any debris that was loosen by the acid.
- ✓ Of course the dismantled injector may be cleaned in with Muriatic Acid also. Use caution with these caustic solutions.
- ✓ Sometimes an injector is left in the housing too long and can become a chore to remove. If this occurs you may want soak the whole housing in 25% Muriatic Acid. If there is still a problem removing the injector, remove the complete injector housing from the skimmer. Place the housing on several blocks of wood with the flange down and place the handle of a small screwdriver into the hole and "tap" on the Beckett injector. Be careful to not tap too hard, as this will damage the Beckett.
- ✓ Reinstall the Beckett, as stated above in the injector housing. Install Teflon tape if needed.
- ✓ To replace the cover, slowly rotate and tighten the thumbscrews. Tighten with care; just squeeze the flanges together and "snug" the bolts with the other hand. No tools required!
- ✓ There is a hose barb on the inlet side of the air valve; this can be connected to a simple air filter if desired. This will also reduce the sound made by the suction of the Beckett.

Limited Warranty

Product Coverage

All Aerofoamer Protein Skimmers to include 600 Series, 800 Series, Custom Series, and Auto Waste Collection accessories carry a one-year limited warranty. This warranty is for workmanship and materials to the original owner, proof of purchased may be required. If a product is found to be defective return it to Reef Concepts for repair or replacement. If a product is received directly from Reef Concepts broken, save "all" damaged parts and "all" packing material including the container it was shipped in. Notify Reef Concepts within 24 hours.

What is Not Covered

1. Accident, negligence, misuse, abuse, improper installation.
2. Any damaged shipment of the product between third party individuals. (Reef Concepts guarantees the initial delivery of all products shipped directly from Reef Concepts. If a product is received from an dealer broken, save "all" damaged parts and all packing material including the container it was shipped in. Notify that dealer within 24 hours.
3. Repair or attempted repair by anyone other than Reef Concepts
4. Any product which has been altered or on which the serial number has been deface, modified, or removed.
5. Any labor for removal or packing the product for return.

How you can get Warranty Service:

1. If your Reef Concepts product(s) require service, contact Reef Concepts directly. You will be advised how to proceed.
2. Product(s) shipped for service should be packed securely and insured and must be accompanied by a detailed explanation of the problem(s) requiring service.
3. Warranty registration is not required for warranty coverage.

Contact Information **Reef Concepts** **1965 Lake Drive** **Winston Salem, NC 27127**

Phone (336) 785-0076 Fax (336) 785-0043 email frank@reefconcepts.com

http//:reefconcepts.com

Drawing #1

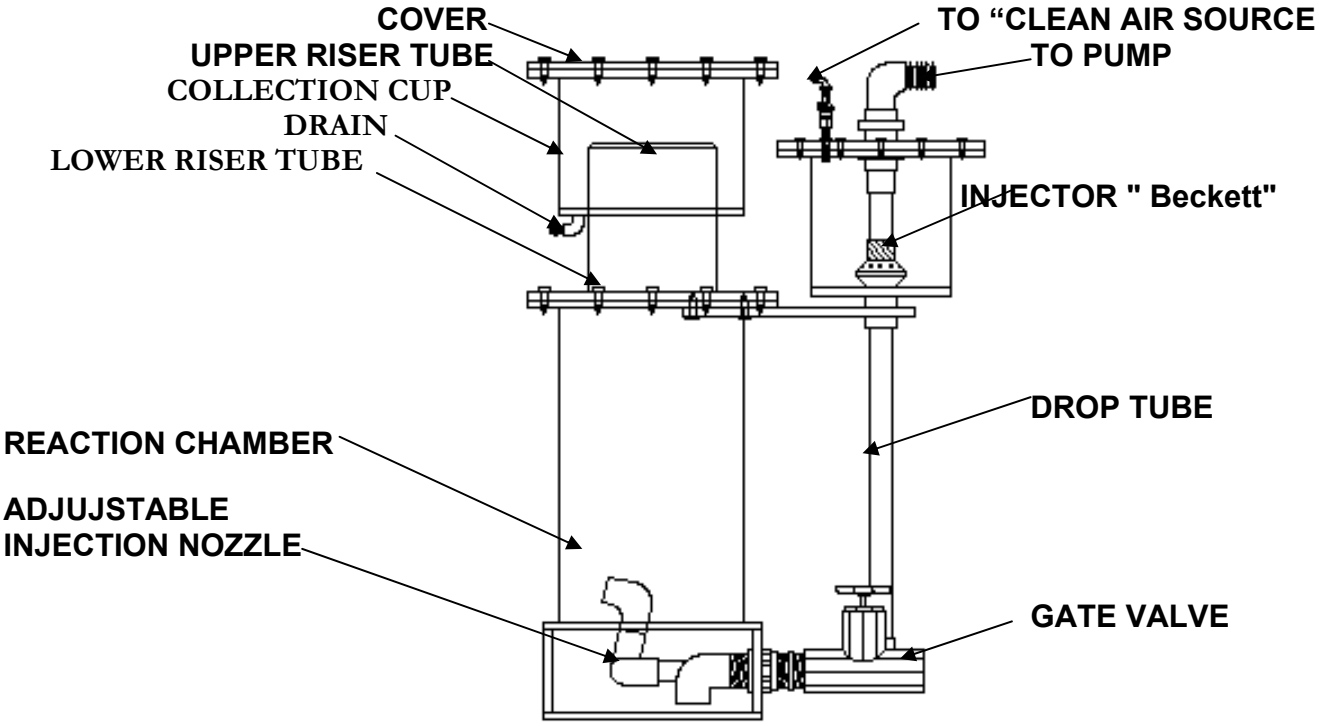

AEROFOAMER

Drawing #2

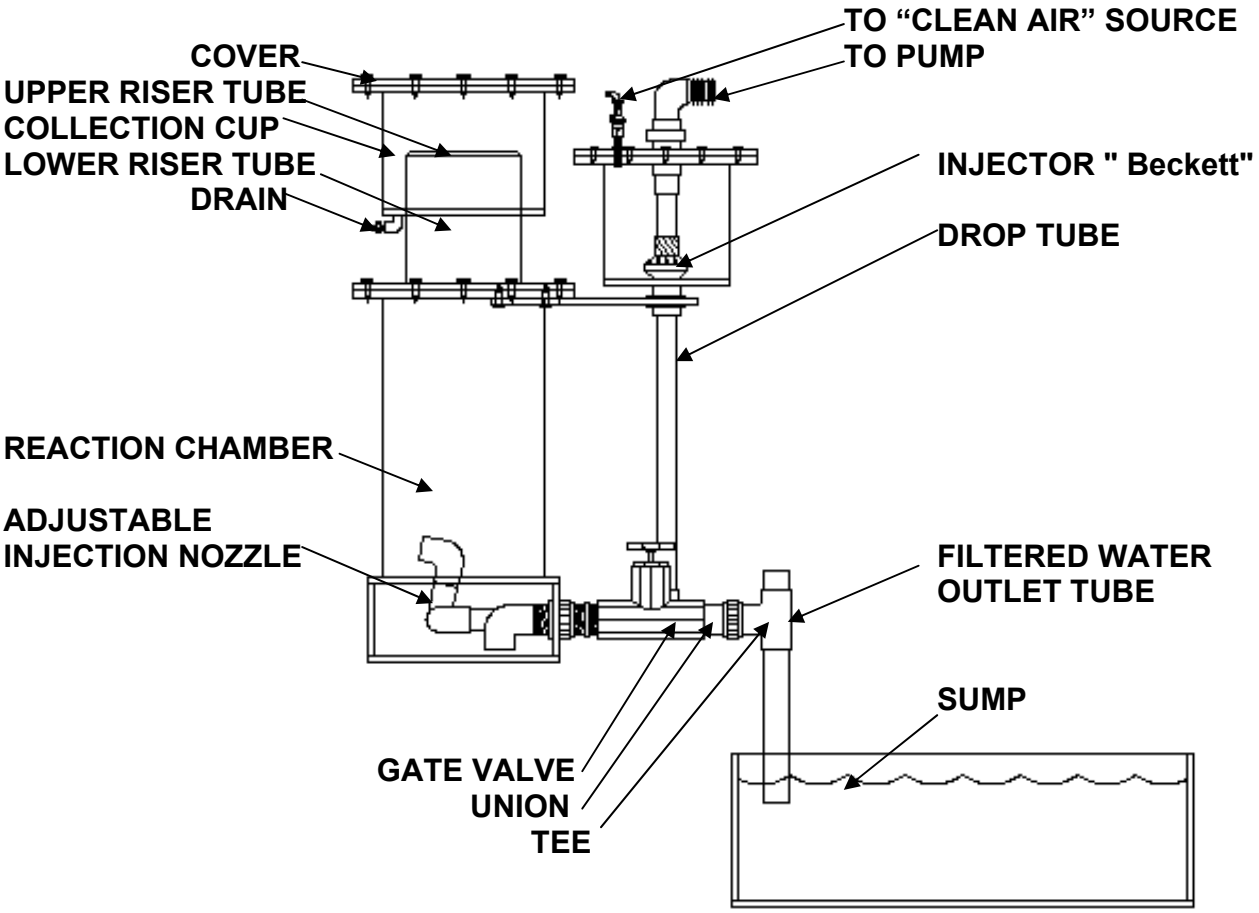

AEROFOAMER
INSTALL “ABOVE” SUMP

Drawing #3

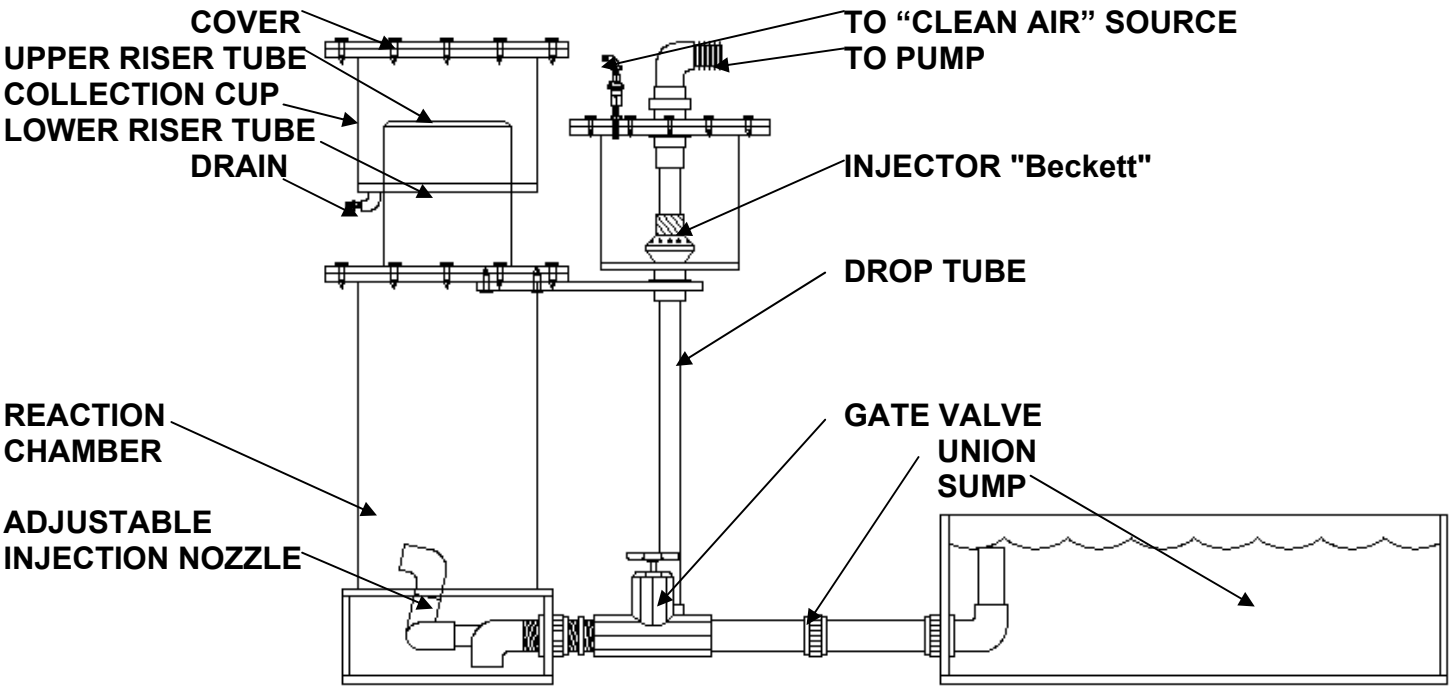

AEROFOAMER
INSTALL “BESIDE & THROUGH” SUMP

Drawing #4

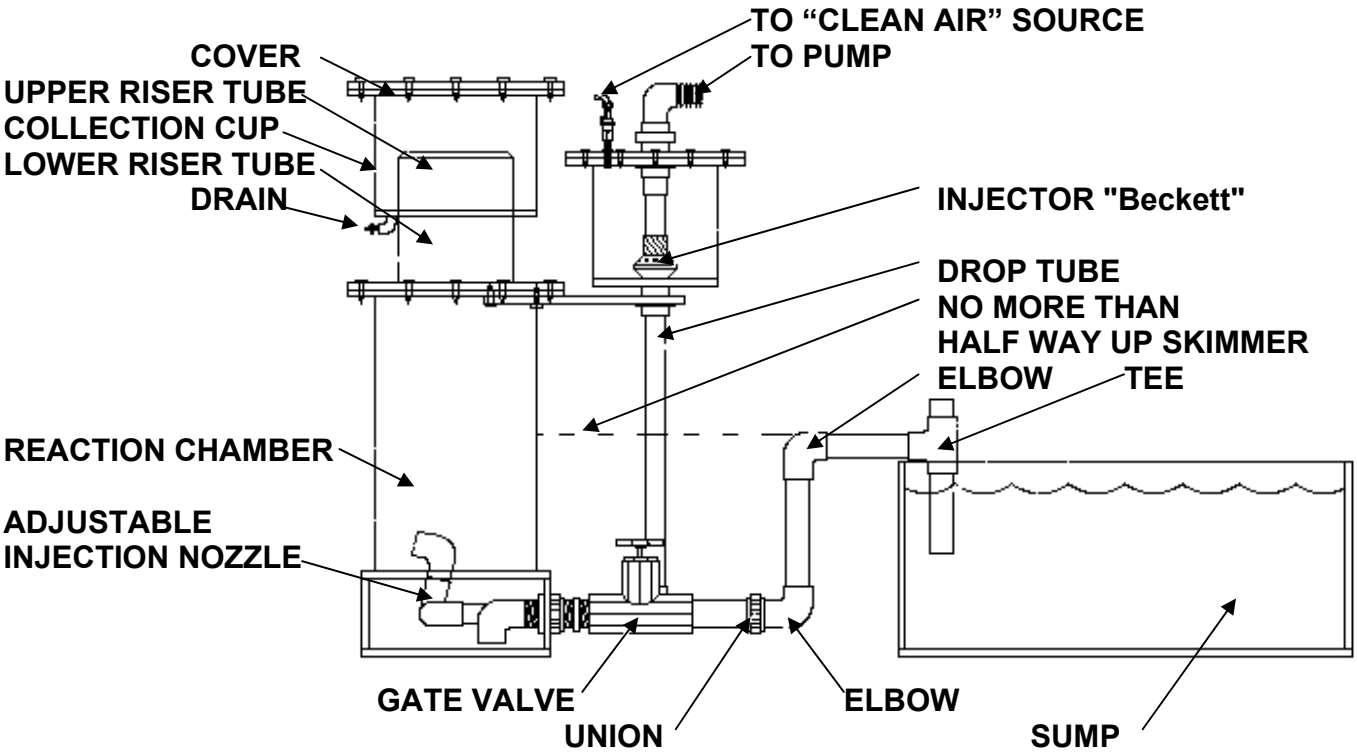

AEROFOAMER
INSTALL “BESIDE & OVER” SUMP

Drawing #5

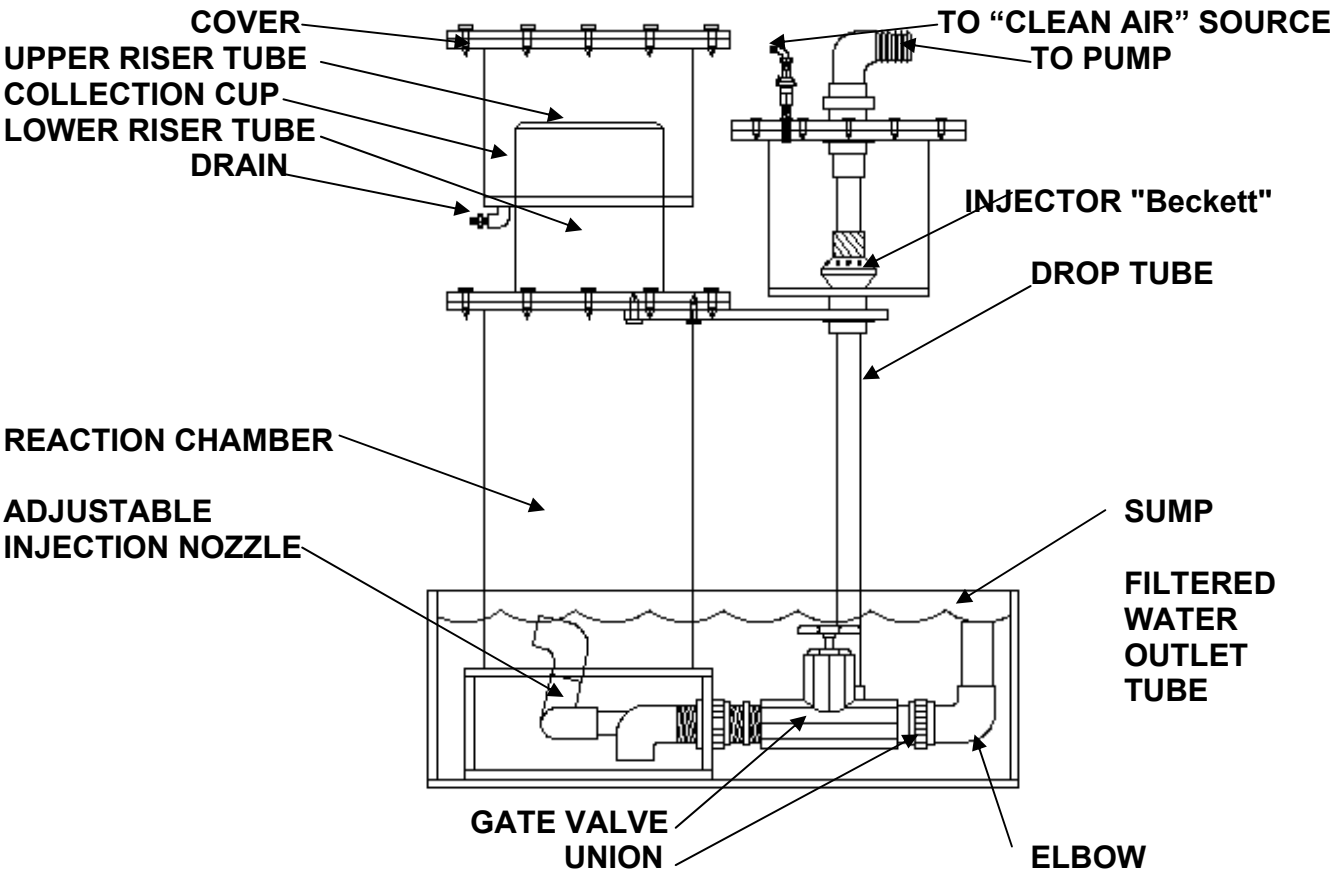

AEROFOAMER
INSTALL “Inside Sump"